Office copy.
Nov 26/85 20 mad

DATE PURCHASED _____ MACHINE SERIAL NO _____

OPTIONS _____ SIZE OF MOTOR _____

PLEASE NOTE:

The Key number system in this parts book is arranged as follows:

○--Key number with one circle denote main assemblies

--Key numbers not circled are individual parts

Please order parts by number

ELECTRIC

HUSKY LIQUID MANURE PUMP

SET-UP and OPERATING INSTRUCTIONS

1. Pump must turn CCW when looking down from top.
2. Pulley on pump is adjustable to adjust speed of the pump. After wiring, have your electrician check amp draw on motor and adjust pulley until motor draws rated amps.
3. Check bottom wood bearing for wear occasionally.
4. Keep belts snug but not overly tight.
5. **EXTREME DANGER** - Never enter a dirty Manure Spreader or Storage tank - one breath of Hydrogen Sulfide Gas is enough to kill.

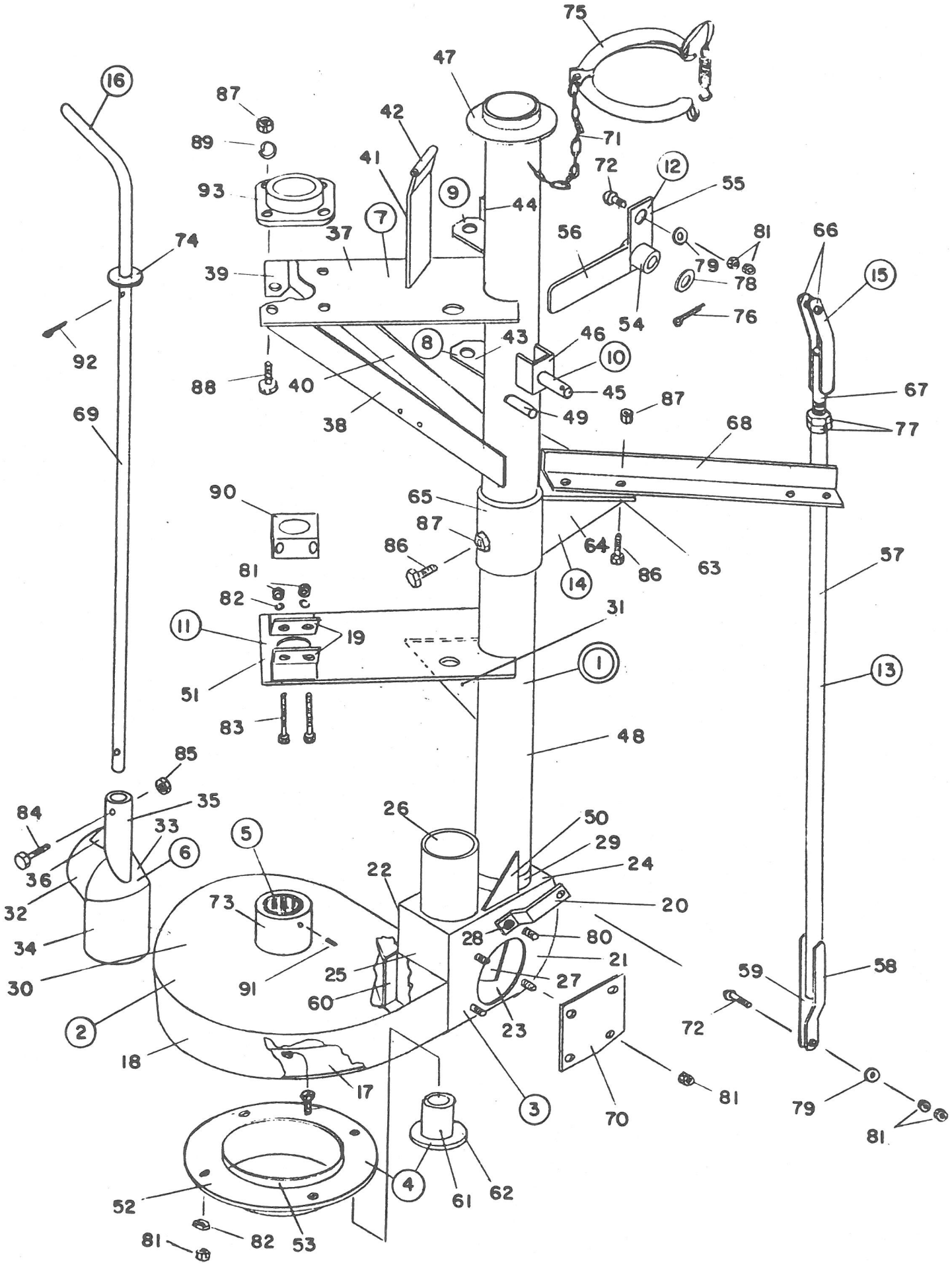
75
47
16
87
42
89
71
41
72
12
93
9
55
44
7
37
56
81
66
74
79
15
39
78
54
76
92
8
43
46
10
88
40
45
67
87
69
38
49
77
68
90
65
87
64
86
63
57
86
81
14
82
31
11
19
1
51
13
83
48
85
35
84
26
50
33
5
29
6
24
36
22
20
32
73
28
80
34
21
25
27
59
58
30
91
60
23
72
2
18
17
3
70
81
79
81
4
61
62
52
81
82
53

Key	Part Number	Description	Qty
1	230-01-00-000	Pump Housing & Standpipe Assy 4 ft	1
	232-01-00-000	Pump Housing & Standpipe Assy 5 ft	1
	234-01-00-000	Pump Housing & Standpipe Assy 6 ft	1
	236-01-00-000	Pump Housing & Standpipe Assy 8 ft	1
	238-01-00-000	Pump Housing & Standpipe Assy 10 ft	1
	239-01-00-000	Pump Housing & Standpipe Assy 12 ft	1
2	230-22-00-000	Fan Housing Assy	1
3	230-01-02-000	Change Box Assy	1
4	230-21-00-000	Cover Plate Assy	1
5	242-78-00-000	Half Marine Brg	1
6	230-24-00-000	Agitating Elbow Assy	1
7	230-01-04-000	Upper Brg Plate Assy	1
8	230-01-05-000	R H Motor Mount Brkt Assy	1
9	230-01-06-000	L H Motor Mount Brkt Assy	1
10	230-01-07-000	Pivot Pin ASsy	1
11	230-01-08-000	Intermediate Brg Plate Assy	1
12	230-04-00-000	Agitator Handle Assy	1
13	230-05-00-000	Control Rod Assy 4 ft	1
	232-05-00-000	Control Rod Assy 5 ft	1
	234-05-00-000	Control Rod Assy 6 ft	1
	236-05-00-000	Control Rod Assy 8 ft	1
	238-05-00-000	Control Rod Assy 10 ft	1
	239-05-00-000	Control Rod Assy 12 ft	1
14	230-11-00-000	Floor Brkt Assy	1
15	230-13-00-000	Over Centre Arm Assy	1
16	230-25-00-000	Agitator Turn Lever Assy 4 ft	1
	232-26-00-000	Agitator Turn Lever Assy 5 ft	1
	234-27-00-000	Agitator Turn Lever Assy 6 ft	1
	236-28-00-000	Agitator Turn Lever Assy 8 ft	1
	238-29-00-000	Agitator Turn Lever Assy 10 ft	1
	239-30-00-000	Agitator Turn Lever Assy 12 ft	1
17	230-22-00-106	Fan Housing Bottom Plate	1
18	230-01-01-003	Housing Band	1
19	230-01-01-004	Brg Holder	*2
20	230-01-02-005	Flapper Arm	1
21	230-01-02-006	Inspection Side Plate	1
22	230-01-02-007	Side Plate	1
23	230-01-02-008	Change Box Band	1
24	230-01-02-009	Top Plate	1
25	230-01-02-010	End Plate	1
26	230-01-02-118	Flapper Seat - Long	1
27	230-01-02-012	Flapper	1
28	230-01-02-013	Flapper Shaft	1
29	230-01-02-011	Flapper Seat - Short	1
30	230-22-00-115	Fan Housing Top Plate	1
31	234-01-08-116	Intermediate Brg Gusset	*1
32	230-01-03-017	Agitating Elbow Top pc	1
33	230-01-03-018	Agitating Elbow Centre pc	1
34	230-24-00-117	Agitating Elbow Base	1
35	230-01-03-020	Turn Socket	1
36	230-01-03-021	Turn Socket Gusset	1
37	230-01-04-022	Bearing Plate	1
38	230-01-04-023	R H Brg Plate Brace	1
39	230-01-04-024	Tension Rod Brkt	1
40	230-01-04-025	L H Brg Plate Brace	1
41	230-01-04-026	Guard Hinge Plate	1
42	230-01-04-027	Guard Sleeve	1
43	230-01-05-028	Pivot Brkt	2
44	230-01-05-029	Hinge Gusset	2
45	230-01-07-030	Pivot Pin	1
46	230-01-07-031	Pivot Pin Brkt	1

Key	Part Number	Description	Qty
47	230-01-00-032	Standpipe Ring	1
48	230-01-00-033	Standpipe - 4 ft	1
	232-01-00-034	Standpipe - 5 ft	1
	234-01-00-035	Standpipe - 6 ft	1
	236-01-00-036	Standpipe - 8 ft	1
	238-01-00-037	Standpipe - 10 ft	1
	239-01-00-038	Standpipe - 12 ft	1
49	230-01-00-039	Stop Rod	1
50	230-01-00-040	Standpipe Gusset	2
51	234-01-08-041	Intermediate Brg Plate	*1
52	230-21-00-104	Housing Cover Plate	1
53	230-21-00-105	Inlet Ring	1
54	230-04-00-047	Handle Pivot	1
55	230-04-00-048	Agitator Lever	1
56	230-04-00-049	Handle	1
57	230-05-00-050	Control Pipe - 4 ft	1
	232-05-00-051	Control Pipe - 5 ft	1
	234-05-00-052	Control Pipe - 6 ft	1
	236-05-00-053	Control Pipe - 8 ft	1
	238-05-00-054	Control Pipe - 10 ft	1
	239-05-00-055	Control Pipe - 12 ft	1
58	230-05-00-056	Control Rod Brkt	1
59	230-05-00-057	Control Rod Bar	1
60	230-22-00-107	Filler Plate	1
61	230-06-00-059	Foot Spacer	1
62	230-06-00-060	Foot	1
63	230-11-00-070	Floor Brkt Base	1
64	230-11-00-071	Floor Brkt Gusset	2
65	230-11-00-072	Slide Tube	1
66	230-13-00-075	Over Centre Arms	2
67	230-13-00-076	Adjusting Rod	1
68	230-00-00-077	Floor Brkt Legs	2
69	230-25-00-119	Agitator Turn Lever - 4 ft	1
	232-26-00-120	Agitator Turn Lever - 5 ft	1
	234-27-00-121	Agitator Turn Lever - 6 ft	1
	236-28-00-122	Agitator Turn Lever - 8 ft	1
	238-29-00-123	Agitator Turn Lever - 10 ft	1
	239-30-00-124	Agitator Turn Lever - 12 ft	1
70	230-00-00-084	Inspection Plate	1
71	206-13-00-096	Clamp Retaining Chain	1
72	R07620	3/8 x 1 1/2 Hex Bolt	2
73	242-02-00-021	Brg Holder	1
74	R07827	3/4" Flat Washer	1
75	R08078	8" Quick Clamp	1
76	R08021	1/8 x 1 Cotter Pin SS	1
77	R07786	5/8 Hex Nut	2
78	R07826	5/8 Flat Washer	1
79	R07823	3/8 Flat Washer	2
80	R07890	3/8 x 3/4 Flat Slot Hd Machine Screw	4
81	R07783	3/8 Hex Nut	**18
82	R07803	3/8 Lock Washer	**10
83	R07625	3/8 x 4 Machine Bolt	*2
84	R07612	5/16 x 1 1/2 Machine Bolt	1
85	R07782	5/16 Hex Nut	1
86	R07628	7/16 x 1 Machine Bolt	5
87	R07784	7/16 Hex Nut	9
88	R07629	7/16 x 1 1/2 Machine Bolt	4
89	R07804	7/16 Lock Washer	4
90	R20229	1 3/8 Wood Brg	*1
91	R07928	3/8 - 16 x 1/2 S S Set Screw	1
92	R08016	1/4 x 2 Cotter Pin	1
93	R20185	1 3/8 Flange Brg	1

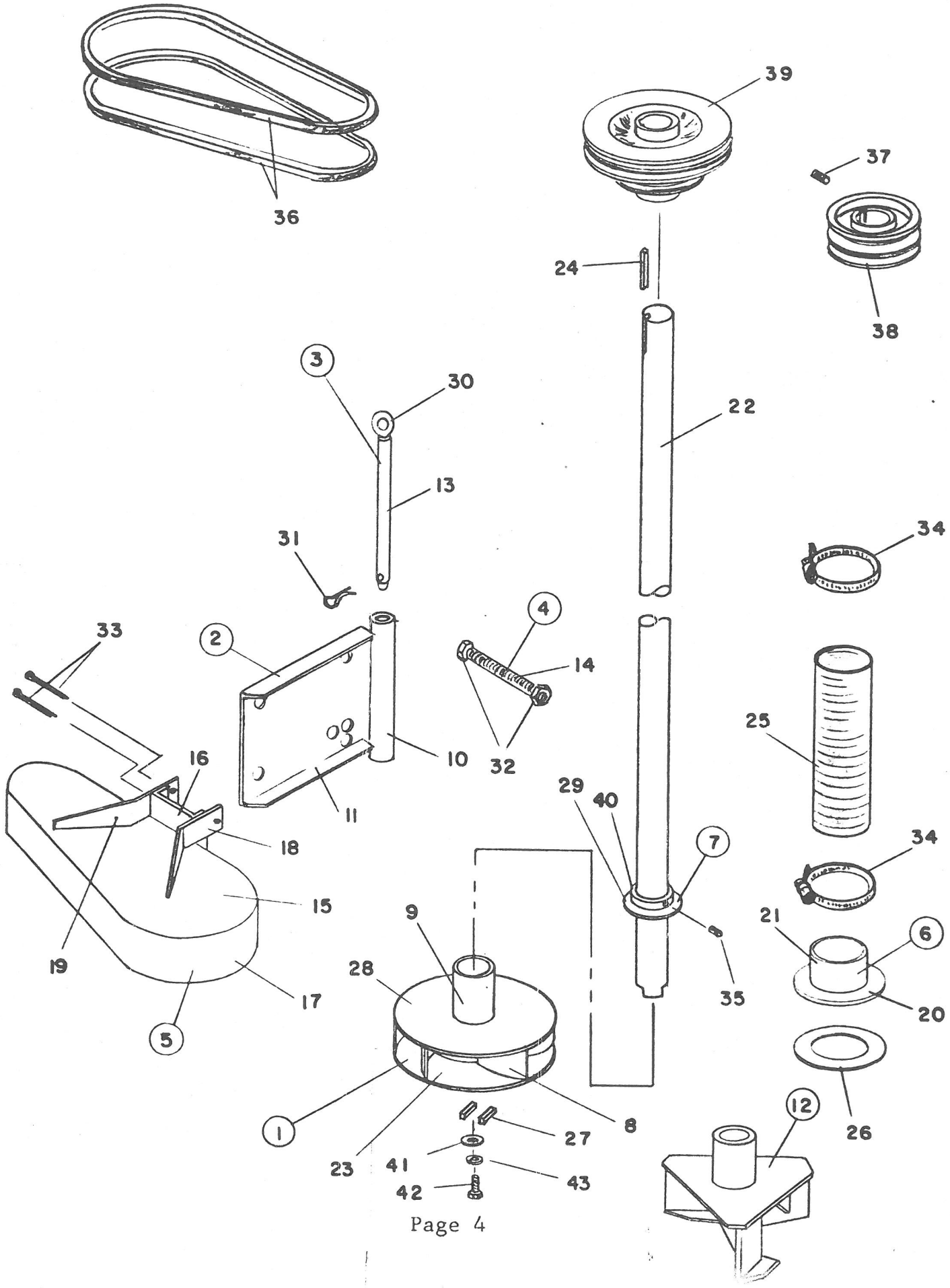
36
39
37
24
38
3
30
22
13
31
34
4
33
2
14
25
10
32
16
11
29
40
7
18
34
15
9
21
6
19
28
35
20
17
5
26
1
8
12
27
23
41
43
42

Key	Part Number	Description	Qty
1	230-20-00-000	Impeller Assy	1
2	230-07-00-000	Motor Mount Assy	1
3	230-08-00-000	Motor Mount Pin Assy	1
4	230-09-00-000	Tension Bolt Assy	1
5	230-10-00-000	Belt Guard Assy	1
6	230-12-00-000	Standpipe Adaptor Assy	1
7	230-23-00-000	Splash Guard Assy	1
8	230-20-00-100	Impeller Blade	6
9	230-20-00-099	Shaft Sleeve	1
10	230-07-00-061	Motor Mount Sleeve	1
11	230-07-00-062	Motor Mount	1
12	230-31-00-000	3 Blade Impeller - Optional	
13	230-08-00-064	Motor Mount Pin	1
14	230-09-00-065	Tension Rod	1
15	230-10-00-066	Guard Top	1
16	230-10-00-067	Guard Support Channel	1
17	230-10-00-068	Guard Band	1
18	230-10-00-069	R H Guard Brace	1
19	230-10-00-097	L H Guard Brace	1
20	230-12-00-073	Discharge Elbow Ring	1
21	230-12-00-074	Standpipe Adaptor	1
22	230-00-00-109	Drive Shaft - 4' - 0" Model	1
	232-00-00-110	Drive Shaft - 5' - 0" Model	1
	234-00-00-111	Drive Shaft - 6' - 0" Model	1
	236-00-00-112	Drive Shaft - 8' - 0" Model	1
	238-00-00-113	Drive Shaft - 10' - 0" Model	1
	239-00-00-114	Drive Shaft - 12' - 0" Model	1
23	230-20-00-101	Impeller Lower Plate	1
24	230-00-00-092	Pulley Key	1
25	230-00-00-093	4" Flex Hose	1
26	206-00-00-095	Standpipe Gasket	1
27	230-20-00-103	Shaft Sleeve Pin	2
28	230-20-00-102	Impeller Upper Plate	1
29	230-23-00-108	Splash Guard	1
30	R07925	1/4 x 1 1/2 Dia Ring	1
31	R07948	5/32 Hair Pin Cotter	1
32	R07786	5/8 Hex Nut	2
33	R08017	1/4 x 4 Cotter Pin	2
34	R02237	H-5 72 Gear Clamp 4"	2
35	R07909	3/8 x 3/8 Allen Hd Set Screw	1
36	R20932	38B - V Belts	2
37	R07903	1/4 x 3/8 Allen Hd Set Screw	1
38	R21064	2 H B 3.5 x 1 1/8 Pulley	1
39	R21062	Variable Pitch Pulley 1 3/8 Bore	1
40	R09554	1 3/8 Lock Collar	1
41	R07825	1/2" Flat Washer	1
42	R08217	1/2 x 1 1/4 S S Hex Bolt	1
43	R07805	1/2" Lock Washer	1